NOVOTECHNIK - TS 25

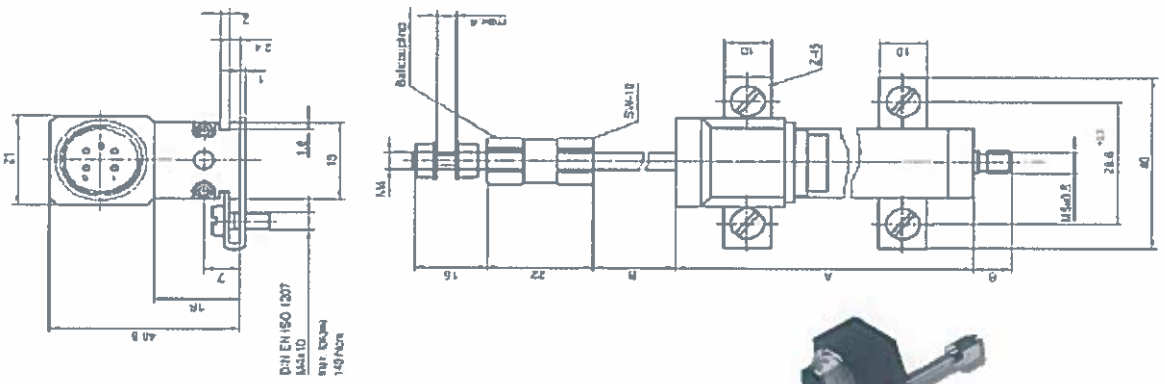

Type designations	T25 TS25	T50 TS50	T75 TS75	T100 TS100	T150 TS150	with cable with plug
Electrical Data						
Defined electrical range	25	50	75	100	150	mm
Nominal resistance	1	5	5	5	5	kΩ
Resistance tolerance	20					±%
Independent linearity	0.2	0.15	0.1	0.075	0.075	±%
Repeatability	0.002					mm
Recommended operating wiper current	≤ 1					µA
Max. wiper current in case of malfunction	10					mA
Max. permissible applied voltage	42					V
Effective temperature coefficient of the output-to-applied voltage ratio	typical 5					ppm/K
Insulation resistance (500 VDC, 1 bar, 2 s)	≥ 10					MΩ
Dielectric strength (50 Hz, 2 s, 1 bar, 500 VAC)	≤ 100					µA
Mechanical Data						
Overall length (dimension A)	63	88	113	138	188	±1 mm
Mechanical stroke (dimension B)	30	55	80	105	155	±1.5 mm
Weight with cable with plug	140 88	160 107	170 132	190 150	220 190	g g
Weight of the actuating shaft with coupling and wiper block	35	43	52	58	74	g
Operating force (horizontal)	≤ 0.30					N
Compensation provided by ball bearing	±1 mm parallel offset, ±2.5° angular offset					
Maximum permitted torque for fixing screws (with washer)	140					Ncm

CARATTERISTICHE

TRASDUTTORE LINEARE NOVOTECHNIK TS25

BLOCCAGGIO INFERIORE

Modifiche

DESCRIZIONE IMPIEGO LINEA : DENTATRICE GLEASON-PFAUTER	CODICE MATERIALE **53790195**	
TARGA : MACCHIN. / IMPIANTO :	DATA 18/04/2011	STAB. A123 Termoli
DESCRIZIONE MATERIALE TRASDUTTORE LINEARE	DISEGNATORE IANNETTA G.	
SCALA	FIAT POWERTRAIN	