NAPETOST / VOLTAGE	230 V
FREKVENCA / FREQUENCY	50 Hz
NAZIVNA MOČ / NOMINAL POWER	1800 W

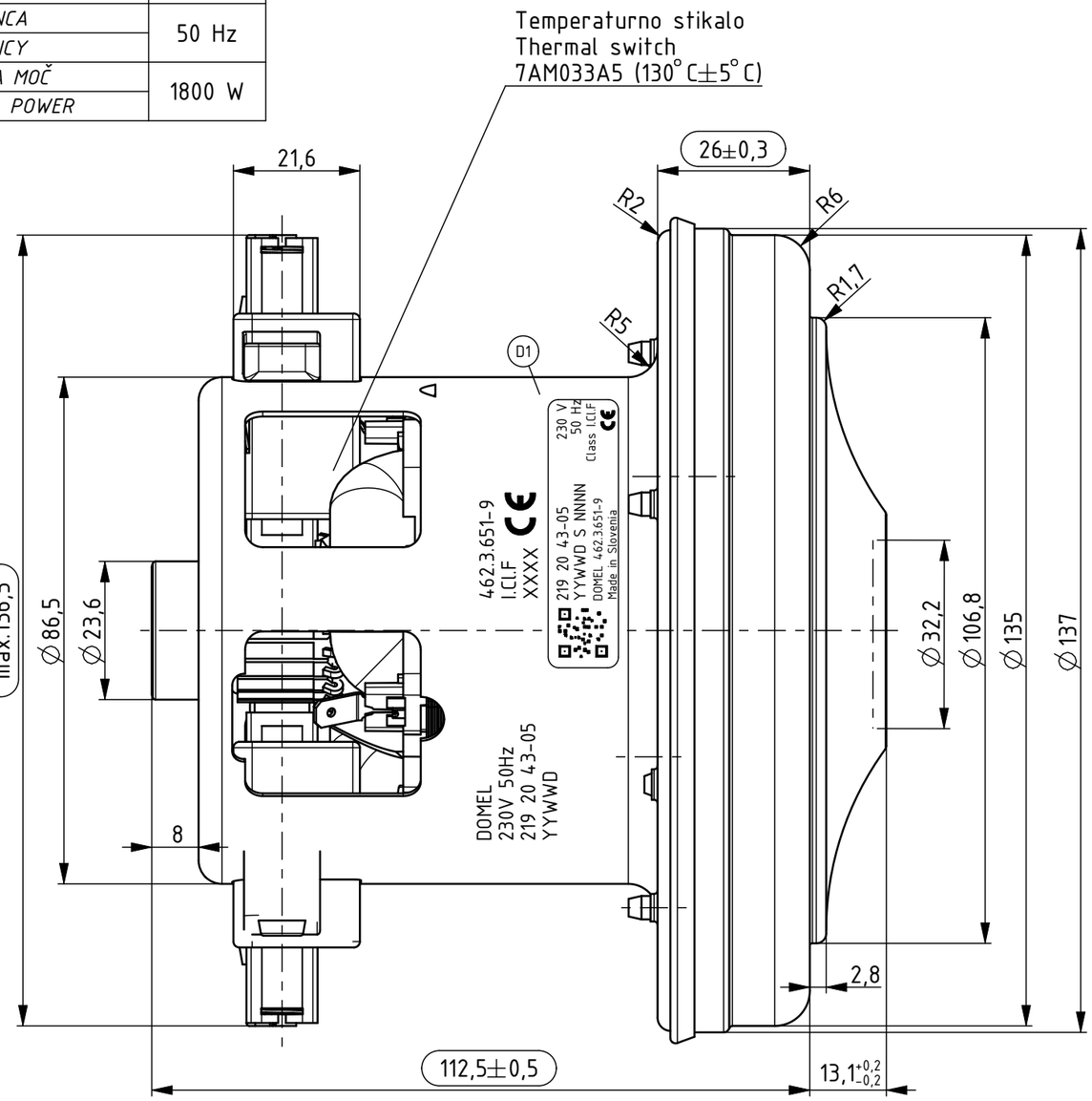

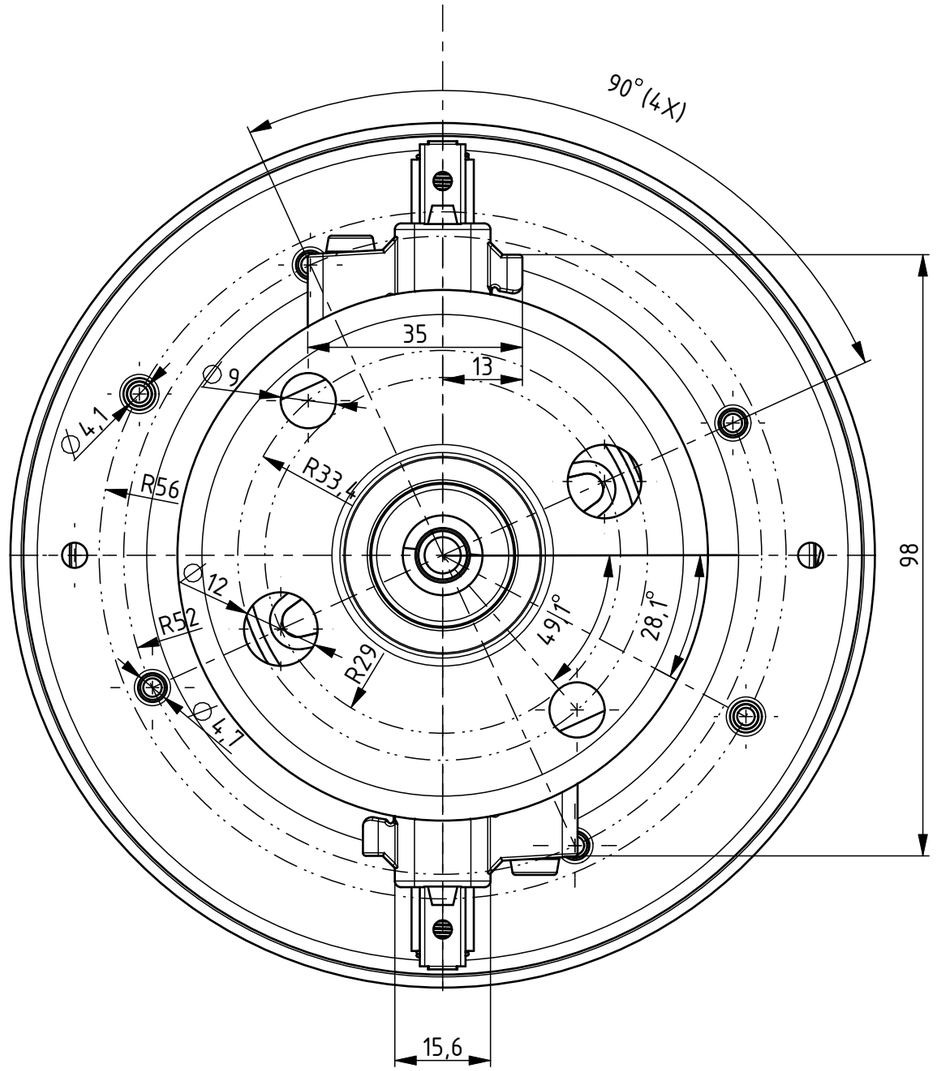

D2

Opombe / Remarks
QR koda / QR code:
219204305YYWWDSNNNN1049251

OSNOVNE ZNAČILNOSTI		TYPICAL CHARACTERISTICS	
IZVEDBA	ENOSTOPENJSKA	FAN SYSTEM	SINGLE STAGE
VLEŽAJENJE	DVA KROGLIČNA LEŽAJA	BEARINGS	DUAL BALL
VRSTA PRETOKA	SKOZI MOTOR	DISCHARGE	THRU FLOW
SMER VRTENJA	DESNA	DIRECTION OF ROTATION	CW

Verzija	Status

Ozn. Mark	Št. obvestila Nr. of notice	Datum Date	Ime Name
AD	15797	10.01.22	I. Potočnik
D2	12347	04.05.16	T. Čemažar
C1	10676	27.03.13	D. Vrhunc
B1	8991	28.05.09	M. Novinc
A0	8644	18.06.08	B. Rihtaršič

Tolerance odprtih mer / Tolerances without individual indications: ISO 8015, ISO 2768 – mK

Površinska hrapavost / Surface finishing

	Datum/Date	Ime/Name
Izdelal / Designed	13.10.2006	B. Pogačnik
Pregl. / Verified	10.1.2022	B. Benedik

DOMEL®
Otoki 21, 4228 Železniki, Slovenija

Merilo / Scale: 1:1

Original format: ISO 5457 – A3

Gradivo / Material

Naziv / Title: SESALNA ENOTA / VACUUM CLEANER MOTOR

Koda / Code: 462.3.651-9

List / Sheet: 3+

Stran / Page: 1

4623651009_MKR2651-9

Izdelano s CAD/ProEngineer - ročno spreminjanje ni dovoljeno! Vsak prenos tretjim osebam ali uporaba v nedogovorjene namene ni dovoljena po zakonu o avtorskih pravicah.
Made with CAD/ProEngineer - changing is not allowed! Any unauthorized copying of this drawing or unauthorized distribution of the information contained herein is prohibited.